BANGLADESH UNIVERSITY OF ENGINEERING &TECHNOLOGY

DEPARTMENT OF ELECTRICAL & ELECTRONIC ENGINEERING

Project title

DC to AC Inverter Using PWM Switching

Course No: EEE 208(S)
Course Title: Electronic Circuits II Laboratory

Submitted to:

Dr. Md. Shafiqul Islam
Professor, EEE, BUET

Sadman Sakib Ahbab
Lecturer, EEE, BUET

Submitted by:

Irfan Ahmed Ashik-2006038
Md. Muktadir Hasan-2006039

Section: A2
Level: 2 **Term: 2**
Group No: 03

Introduction:

The DC to AC inverter is a crucial component in modern power systems, allowing the conversion of direct current (DC) to alternating current (AC). This project focuses on the design, simulation and analysis of a DC to AC inverter utilizing Pulse Width Modulation (PWM) switching technique. The primary goal of this project is to achieve efficient and controlled conversion of DC power from a source to AC power for various application, such as in renewable energy systems and uninterruptible power supplies (UPS).

Objectives:

The main objective of this project include:
1.Understanding the principles of DC to AC inversion and PWM switching
2.Designing a PWM-based inverter circuit
3.Simulating the inverter circuit using pspice software
4.Analyzing the simulation results for various parameters

Working principles:

1. H-Bridge Configuration:
The core of a DC to AC inverter often involves an H-bridge configuration. An H-bridge consists of four switches: two upper switches and two lower switches. These switches can be power MOSFETs or insulated-gate bipolar transistors (IGBTs). The switches are arranged in a way that allows bidirectional current flow.

2. PWM Generation:
(a)Reference waveform: the desired output waveform, usually a sinusoidal waveform, is defined. This waveform's amplitude will determine the amplitude of the output AC voltage.
(b)Carrier waveform: A high frequency triangular waveform, called the carrier waveform, is generated. The frequency of this waveform is much higher than the desired output frequency.

(c)Comparison: The instantaneous value of the reference waveform is compared to the carrier waveform. If the carrier waveform's value is greater than the reference waveform's value the PWM signal is set to high (1); otherwise, it is set to low (0).
(d)Modulation Index: The modulation index determines the amplitude of the output voltage. It is defined as the ratio of the peak amplitude of the reference waveform to the peak amplitude of the carrier waveform

5. Switching Operation:
Based on the comparison between the reference signal and the carrier signal, the switches in the H-bridge are turned on and off. When the carrier signal is low, the upper switches are turned on, and the lower switches are turned off. When the carrier signal is high, the upper switches are turned off, and the lower switches are turned on. The specific switching pattern depends on the phase relationship between the reference signal and the carrier signal.

6. Output Voltage Synthesis:
The alternating switching of the upper and lower switches creates a voltage waveform across the load connected to the output of the inverter. The duty cycle of the PWM signal determines the effective voltage applied to the load. By adjusting the duty cycle, the inverter can synthesize an output voltage that closely resembles a sinusoidal waveform.

7. Filtering:
While the synthesized waveform may not be a perfect sinusoid, it contains harmonic components due to the square nature of the PWM signal. To obtain a smoother AC waveform, a low-pass filter is often used after the inverter's output. This filter attenuates the higher frequency components, leaving a waveform that closely approximates the desired sinusoidal waveform.

8. Output Regulation:
The frequency and amplitude of the synthesized AC waveform can be controlled by adjusting the frequency of the PWM signal and the modulation index, which is the ratio of the reference signal's amplitude to the carrier frequency.

List of components:

1. DC source
2. Signal generator (sinusoidal and triangular)
3. Op-Amp (uA741)
4. Mosfet
5. Diode
6. Resistor
7. Inductor
8. Capacitor

Schematic diagram of the circuit:

(i)For 60 Hz:

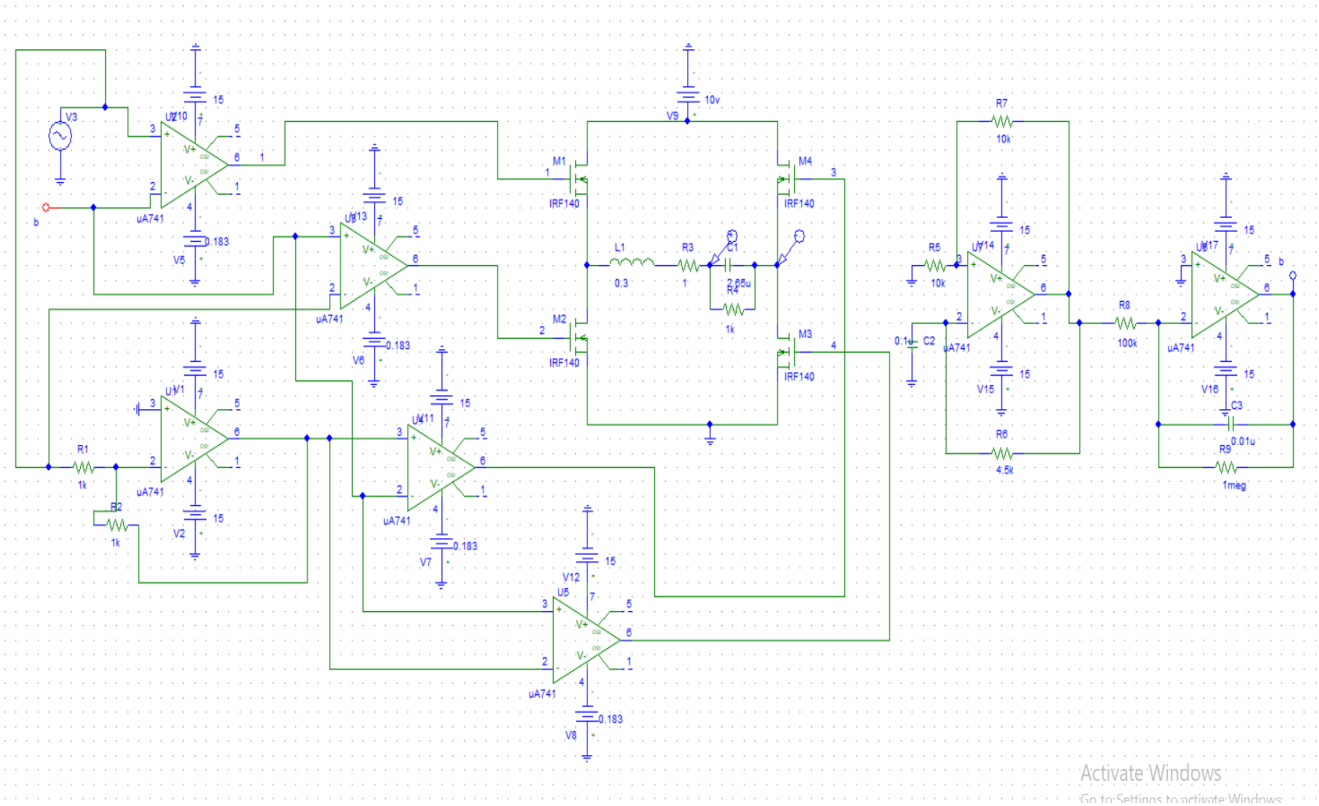

Frequency:

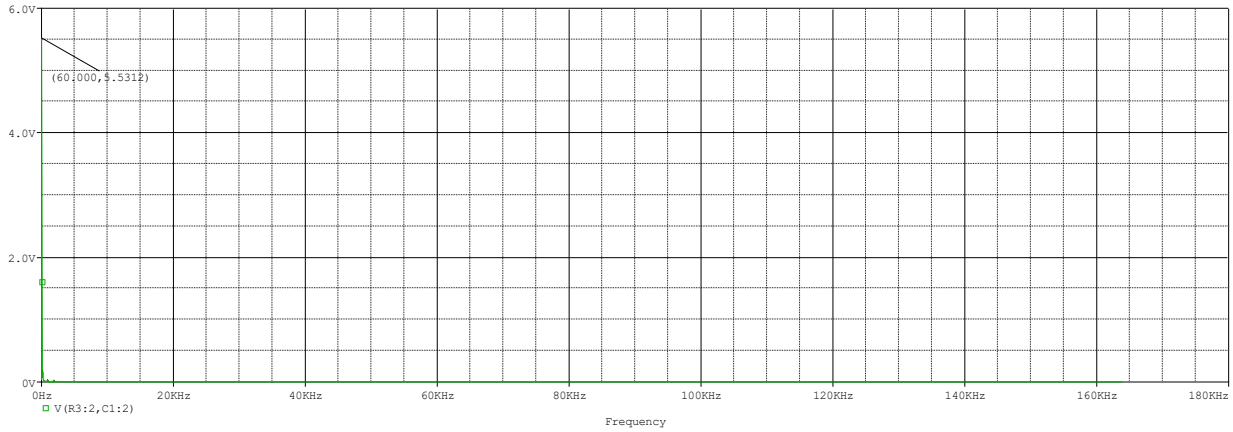

Output:

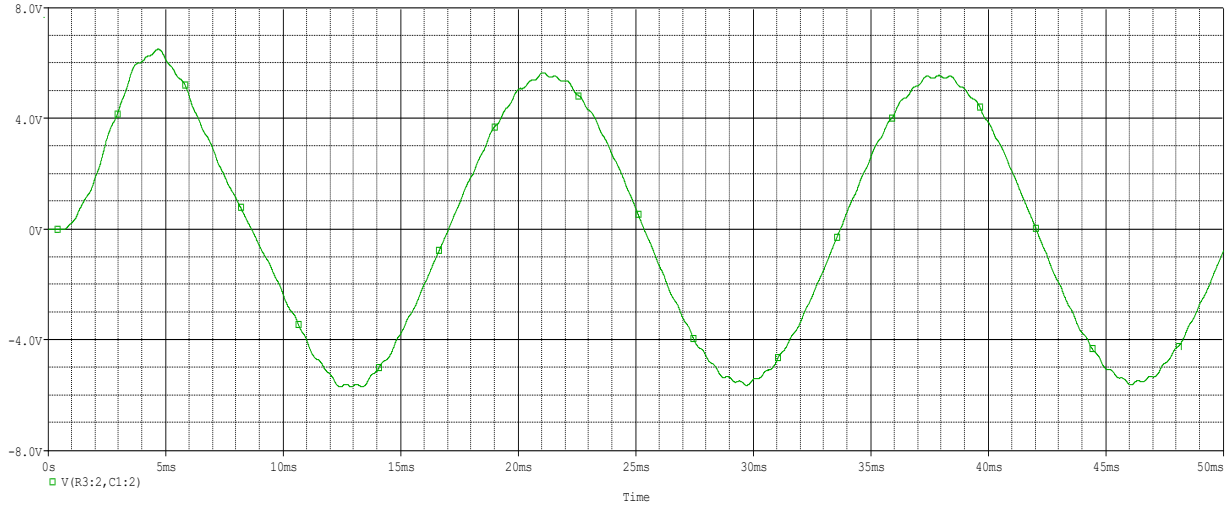

(ii) for 50 Hz:

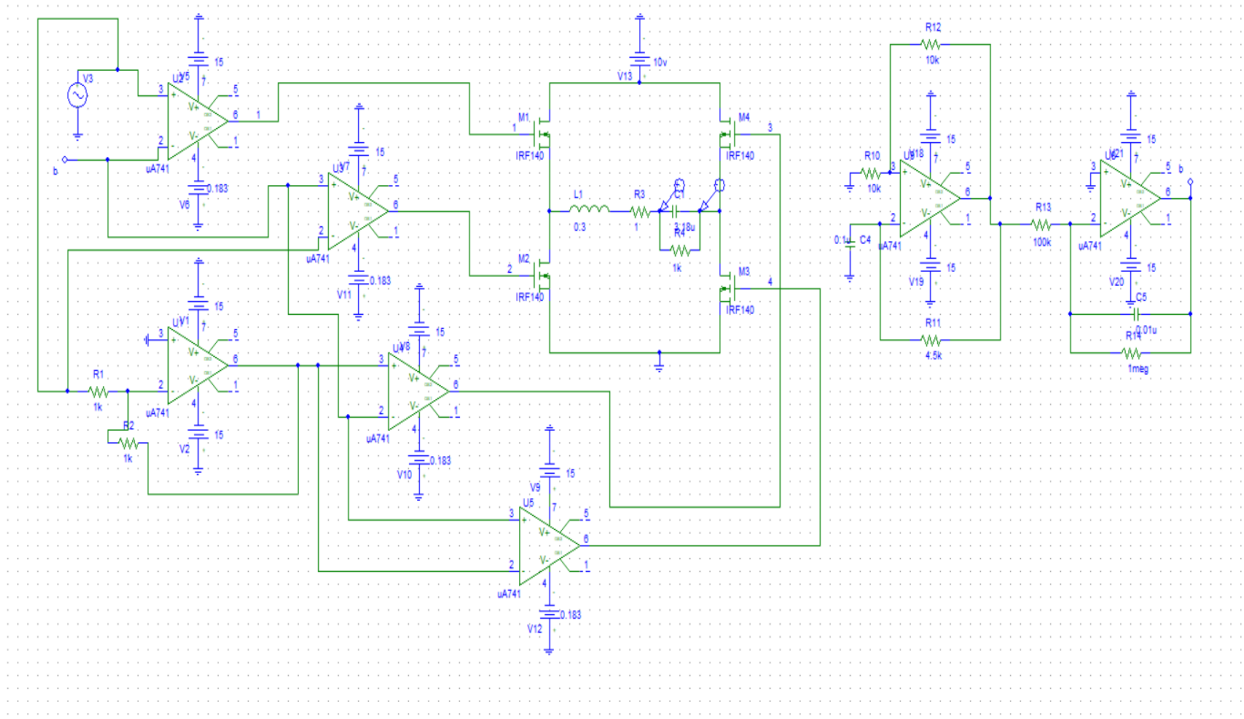

Output

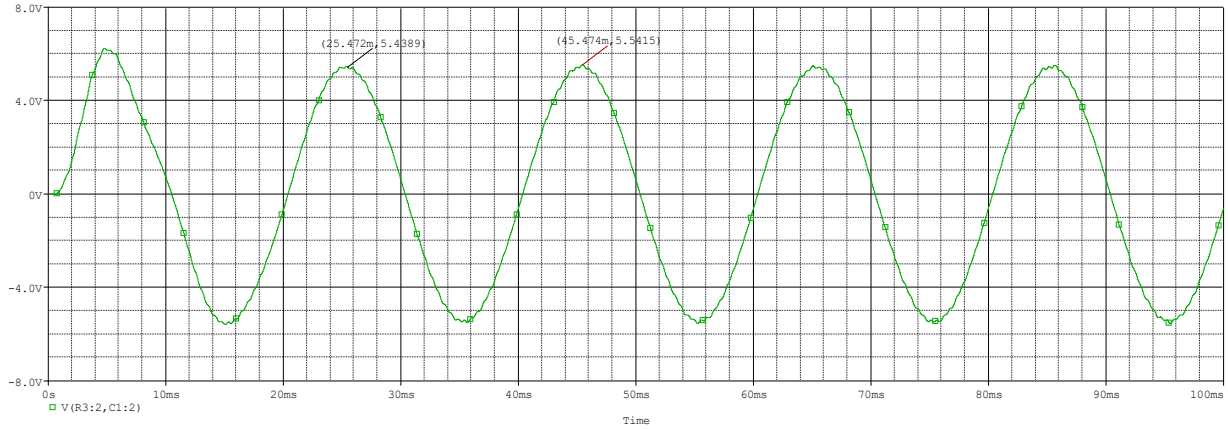

Intermediate diagram:

(i) Signals of switch 1 and switch 2:

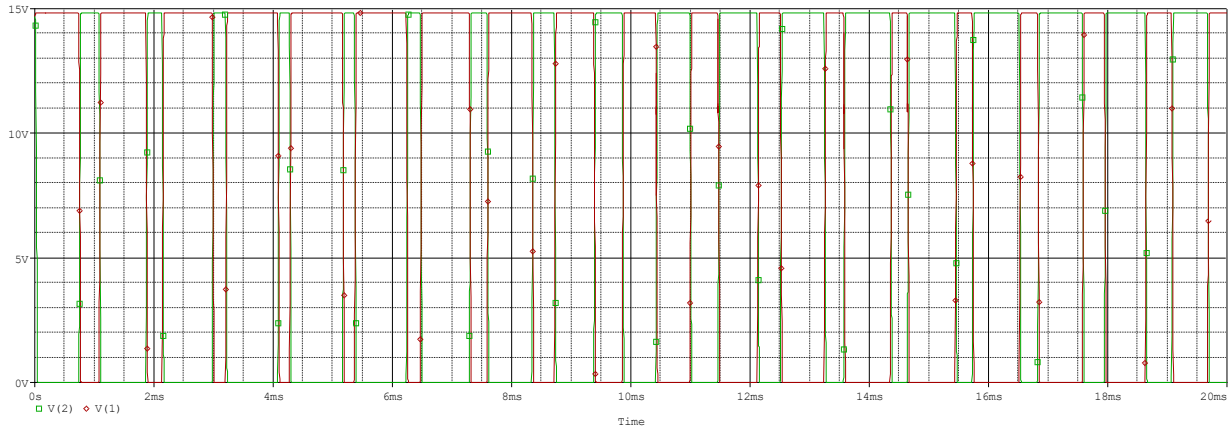

They are working on reverse process. That means when switch 1 is on, switch 2 is in off state and vice versa.

(ii) Signals of switch 3 and switch 4:

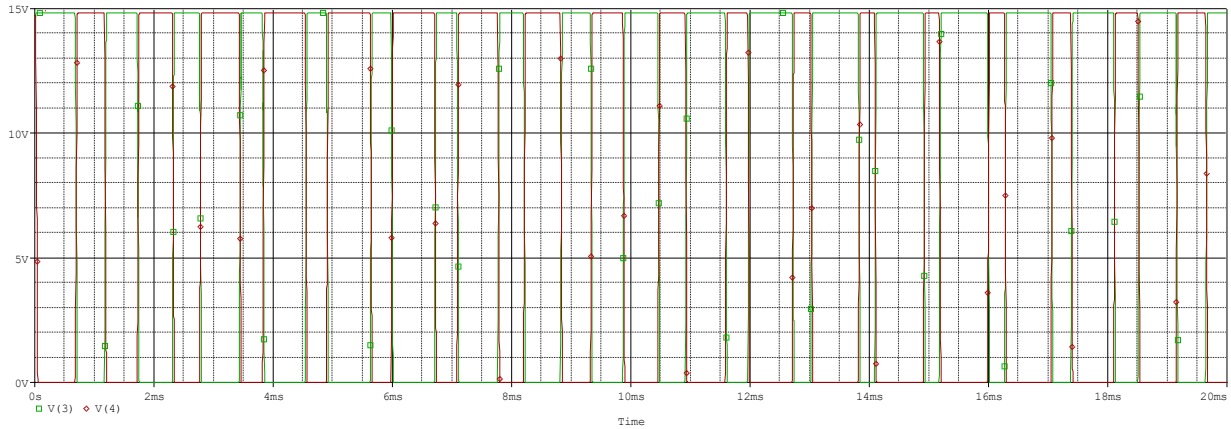

They are also working on reverse process. That means when switch 3 is on, switch 4 is in off state and vice versa.

Output across load:(unfiltered)

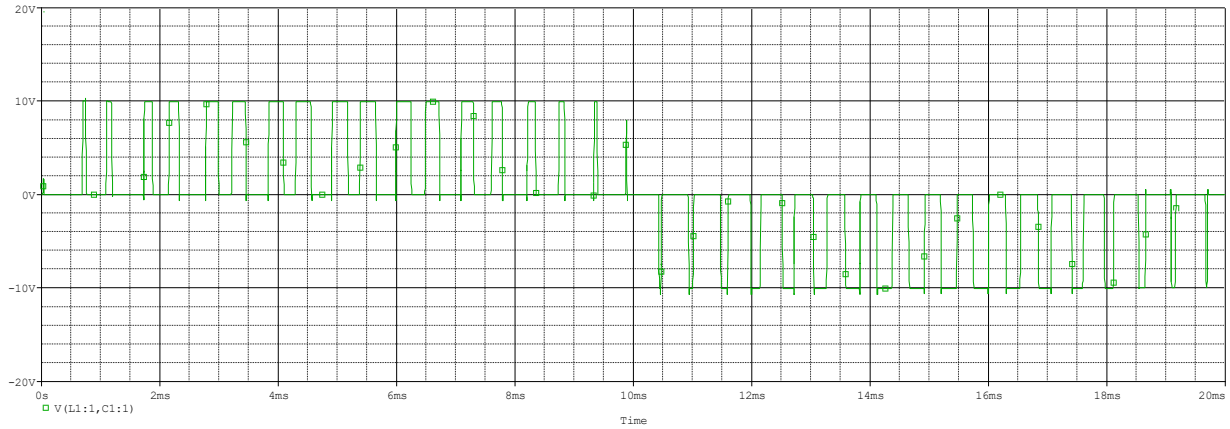

If this signal is passed by a low pass filter, we get the desired output.

Explanation:

(i)PWM generation:

The sinusoidal reference waveform is the desired output waveform you want to achieve from the inverter. In an ideal scenario, the output of the inverter should closely resemble this sinusoidal waveform. By using a sinusoidal reference waveform, you are defining the shape and frequency of the desired AC output.

The triangular carrier waveform is used as a high-frequency switching signal in the PWM technique. It has a fixed frequency that is much higher (20 times) than the desired output frequency. The reason for using a high-frequency carrier waveform is to ensure that the inverter can accurately approximate the desired sinusoidal waveform. The faster switching allows for finer control over the output waveform and helps reduce distortion.

The instantaneous value of the reference sinusoidal waveform is compared with the instantaneous value of the triangular carrier waveform. When the carrier waveform value is greater than the reference waveform value, the corresponding switch is turned on; otherwise, it's turned off.

(ii) switching operation:

Here's how the operation works:

When sinusoidal wave is higher than the triangular wave, the upper switch 1 is turned on and lower switch 2 is turned off. Alternately when triangular wave is higher than the sinusoidal wave, switch 1 is turned off and switch 2 is turned on.

For switch 3 & 4 sinusoidal wave is 180 degrees out of phase from the previous one. But also, in that case when sinusoidal wave is higher than the triangular wave, the upper switch 3 is turned on and lower switch 4 is turned off. Alternately when triangular wave is higher than the sinusoidal wave, switch 3 is turned off and switch 4 is turned on.

By this a modified sinusoidal wave is generated across the load. After filtering this modified signal, we get the proper output. For this we use a low pass filter such that higher harmonic is cancel out and we can make a pure sinusoidal wave.

Loss:

Losses in simulation results can occur due to various factors:

1. Switching Losses: In real-world power electronic devices like MOSFETs or IGBTs, there are switching delays and losses associated with turning the switches on and off. These losses can result in a difference between the ideal PWM signal and the actual switching behavior of the components.

2. Device Characteristics: Power devices might not switch instantaneously, and they have finite rise and fall times. This can lead to distortion in the output waveform.

3. Simulation Precision: Simulations might not perfectly capture all real-world effects. Components, connections, and parasitic effects not accurately represented in the simulation can contribute to losses.

4. Modeling Accuracy: The models used for the components might not fully capture their behavior. Non-idealities in the models can lead to discrepancies between simulation and actual behavior.

5. Filtering: Using a low-pass filter to smooth out the PWM waveform, the filter's characteristics can also impact the output.

Filter calculation:

(i)for 50 Hz:

f=1/2*pi*R*C we take R=1k then, C = 3.18µF

(ii) for 60 Hz:

f=1/2*pi*R*C we take R=1k then, C = 2.65µF

Calculation of Generating triangular carrier wave:

(using astable multivibrator)

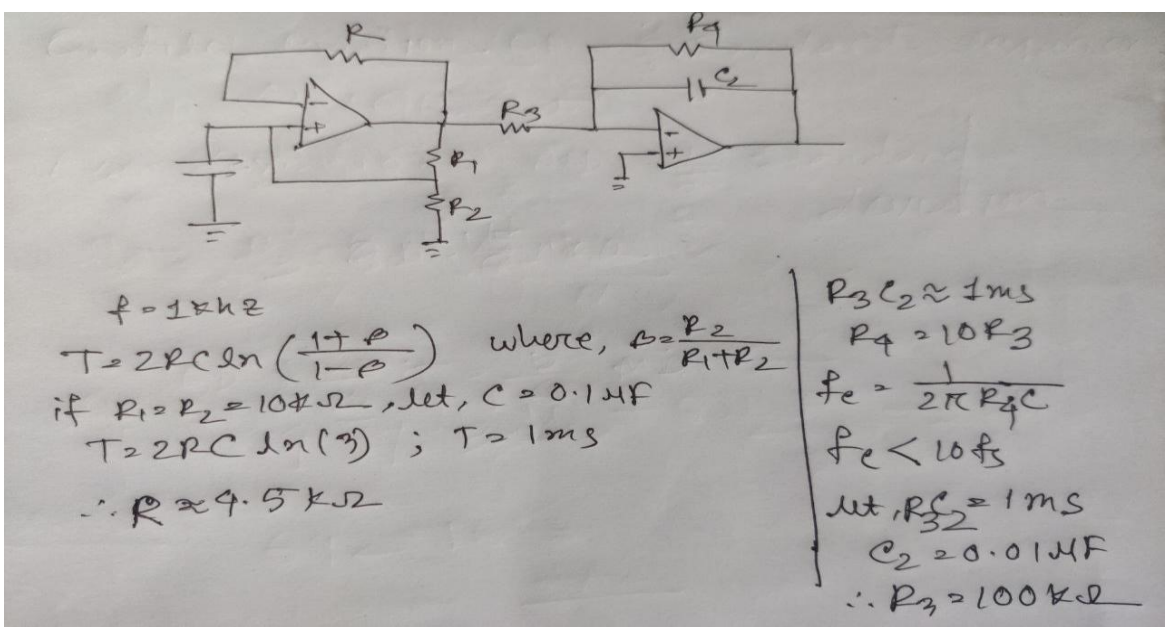

Limitations:

Using a sinusoidal reference waveform and a triangular carrier waveform for PWM switching in a DC to AC inverter presents certain limitations. Achieving precise voltage regulation is challenging due to variations in modulation index and input voltage.Rapid switching of power devices can result in switching losses, affecting efficiency. Fixed carrier frequency limits adaptability to different output frequencies.Voltage spikes during switching transitions can stress connected devices.

Discussion:

The project involved implementing a DC to AC inverter using PWM switching and simulating it in PSPICE software. The objective was to generate an AC waveform resembling a desired sinusoid by utilizing a sinusoidal reference waveform and a higher-frequency triangular carrier waveform. Through PSPICE, the simulation aligned the reference and carrier waveforms to produce an AC output. The results highlighted successful AC waveform generation, but also revealed limitations like harmonic distortion and voltage regulation challenges. Efficiency was impacted by switching losses at elevated carrier frequencies. To enhance the approach, exploring advanced PWM methods like SPWM or SHE PWM was suggested for better waveform quality and efficiency. The project's significance lies in showcasing PWM-based DC to AC conversion principles, understanding limitations, and considering advanced strategies for improved performance.